W150HD-LH Holes

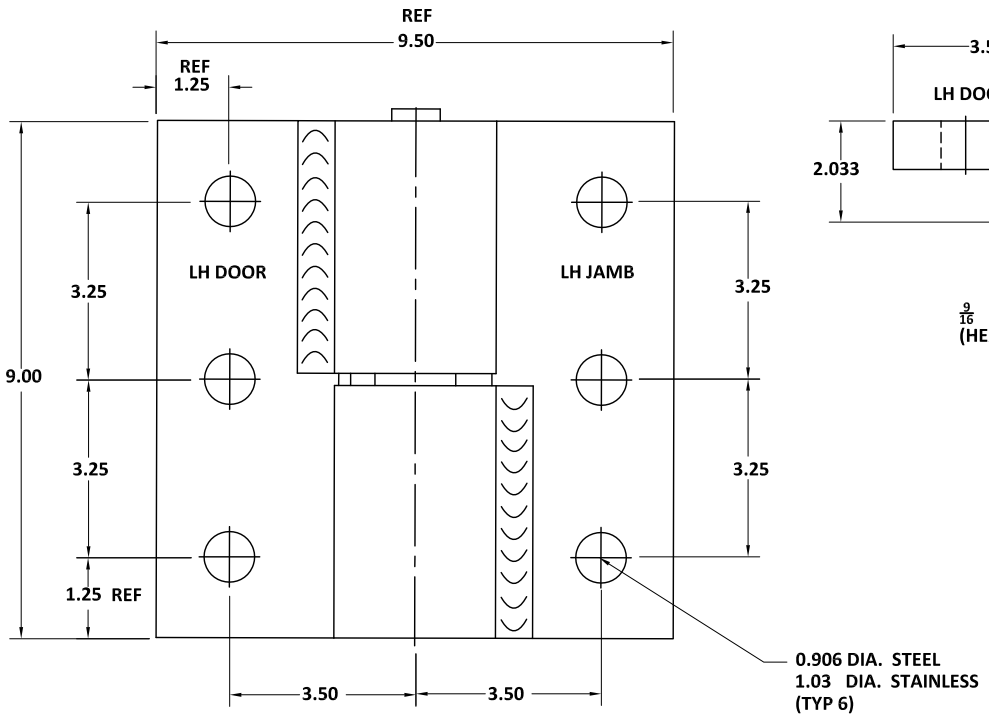

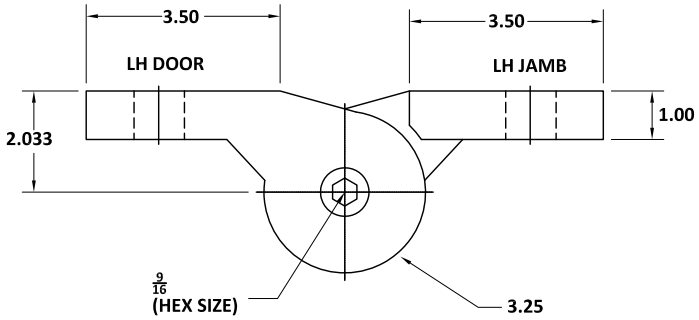

(DO NOT SCALE DRAWING)